DESIGN BY JULIEN RENAULT

HAY

COMPASS PENDANT

HIGHLIGHTS

- A modern take on the classic pendant with a sleek angled conical shade, blending function and timeless style
- The pendants come in two variants – a fixed pendant in two sizes and an adjustable pendant in one size
- The counterbalanced height-adjustable pendant allows precise positioning, providing ambient glow or focused task light
- Designed for use with a replaceable standard retro fit LED dimmable bulb
- Suitable for both private and office environments

COMPASS PENDANT
DESIGN BY JULIEN RENAULT

Designed by Julien Renault for HAY, Compass is a series of lamps based on the classic pendant typology, unified by their distinctive conical silhouette. The angled shade is available in a classic model with fixed cord length, as well as a height-adjustable variant with counterbalanced weight that enables users to precisely position the direction and height to suit their preferences. Crafted in aluminium with different finishes and size options, Compass offers a versatile lighting solution that complements both domestic and office environments.

French designer Julien Renault blends rational methods with artistic freedom in his approach to design. Based in Brussels, he draws inspiration from everyday life, transforming the ordinary into something beautiful. His work for numerous international brands reflects the deep connection between objects and their environments. For HAY, Julien has designed the Pastis Table and Chair series, Compass Lamp Collection, and Layout Chair.

Julien Renault

Compass Pendant 260 & 430 | Brushed aluminium
Compass Adjustable Pendant 430 | Brushed aluminium

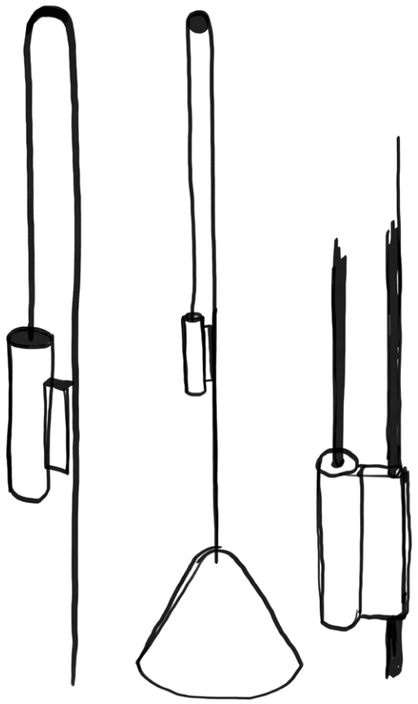

The counterbalancedheight-adjustable pendant allowsprecise positioning, providingambient gloworfocused task light.

Compass Adjustabel Pendant 430 | Brushed aluminium

Compass Adjustabel Pendant 430 | Brushed aluminium
Compass Pendant 260 | Pompeian red aluminium

Compass Adjustabel Pendant 430 | Oister white aluminium

Compass Adjustabel Pendant 430 | Brushed aluminium

Compass Adjustabel Pendant 430 | Brushed aluminium
Compass Pendant 260 | Pompeian red aluminium

Compass Pendant 260 | Pompeian red aluminium
Compass Pendant 260 | Soft black aluminium

MATERIALS

SHADE
Spun aluminium in brushed or wet sprayed finish with bulb holder bracket on inside

CEILING CANOPY
Spun aluminium in brushed or wet sprayed finish

COUNTERWEIGHT
Extruded aluminium casing in brushed or wet sprayed finish with die-cast end caps. Sand-cast iron weight

CORD
Braided textile cable in black with silicone insulation

PRODUCT INFORMATION

DESIGN YEAR
2025

COUNTRY OF ORIGIN
China

COLOUR & FINISH

Please note that the colours are indicative

VARIANT / COLOUR	Compass Pendant 260	Compass Pendant 430	Compass Adjustable Pendant 430
Brushed aluminium	●	●	●
Soft black	●	●	●
Oyster white	●	●	●
Pompeian red	●		

DIMENSIONS

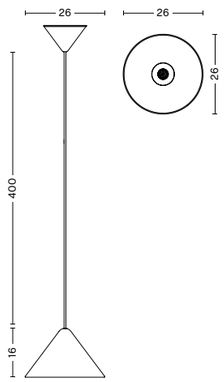

COMPASS PENDANT 260
Width 26 cm
Depth 26 cm
Height 16 cm
Weight 0,8 kg

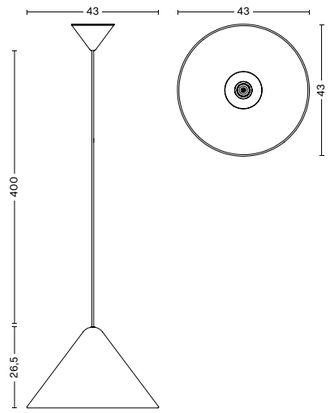

COMPASS PENDANT 430
Width 43 cm
Depth 43 cm
Height 16 cm
Weight 1,3 kg

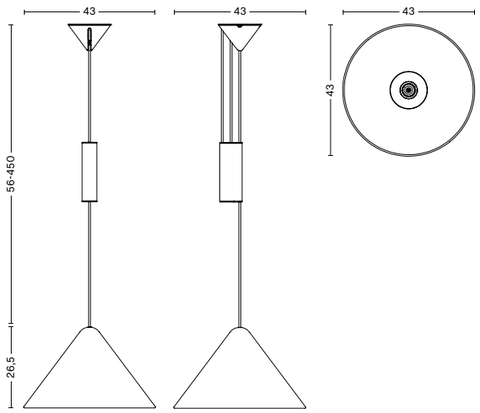

COMPASS ADJUSTABLE PENDANT 430
Width 43 cm
Depth 43 cm
Height 16 cm
Weight 3,2 kg

COMPASS PENDANT 260

TECHNICAL SPECIFICATION

RECOMMENDED LIGHT SOURCE
LED GX53, 5-8W (max. 8W), 500-800lm, 3000K warm white
Bulb not included

DIMMABLE
No

POWER SUPPLY
220-240V AC at 50/60Hz

IP
20

CORD LENGTH
400 cm

SWITCH
No

TEST SPECIFICATION OUTPUTS

Photometrics and the test specification shown is taken using the recommended LED bulb fitted in the production luminaire

LUMEN (LM)
500-800lm

KELVIN (CCT)
3000K warm white

CRI (1-100)
90

PHOTOMETRICS

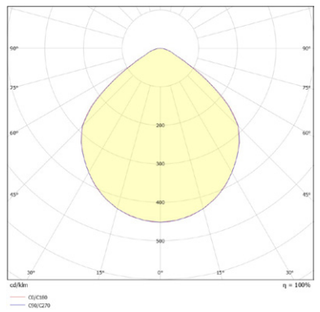

COMPASS PENDANT 430

TECHNICAL SPECIFICATION

RECOMMENDED LIGHT SOURCE
LED E27 (A19), 10-13W (max. 15W), 1000-1500lm, 3000K warm white
Bulb not included

DIMMABLE
No

POWER SUPPLY
220-240V AC at 50/60Hz

IP
20

CORD LENGTH
400 cm

SWITCH
No

TEST SPECIFICATION OUTPUTS

Photometrics and the test specification shown is taken using the recommended LED bulb fitted in the production luminaire

LUMEN (LM)
1000-1500lm

KELVIN (CCT)
3000K warm white

CRI (1-100)
90

PHOTOMETRICS

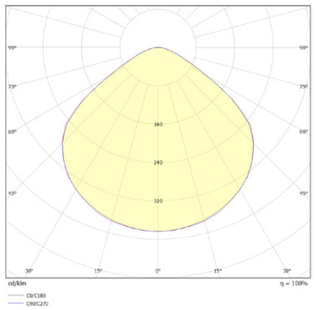

COMPASS ADJUSTABLE PENDANT 430

TECHNICAL SPECIFICATION

RECOMMENDED LIGHT SOURCE
LED E27 (A19), 10-13W (max. 15W), 1000-1500lm, 3000K warm white
Bulb not included

DIMMABLE
Yes
If used in conjunction with a wall-mounted dimmer and suitable LED bulb

---

POWER SUPPLY
220-240V AC at 50/60Hz

IP
20

CORD LENGTH
500 cm

SWITCH
No

TEST SPECIFICATION OUTPUTS

Photometrics and the test specification shown is taken using the recommended LED bulb fitted in the production luminaire

LUMEN (LM)
1000-1500lm

KELVIN (CCT)
3000K warm white

CRI (1-100)
90

PHOTOMETRICS

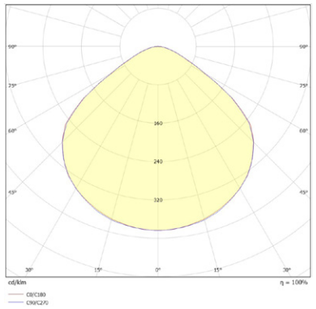

CERTIFICATES

CE APPROVED
This product has been assessed and complies with the essential requirements of the relevant European directives.

LED IP20

Tested according to the following European EN IEC standards which relate specifically to electrical lighting products including:

· EN 60598-2-1 (fixed luminaires)
· EN 60598-1 (general requirements)
· EN 62493 (human exposure to EMC)

DOWNLOADS

Packshots and lifestyle photos, 2D / 3D files, care and maintenance, instructions, test certificates, product fact sheets, and product presentations are available in our Digital Library at hay.com.
LINK TO DIGITAL LIBRARY