DESIGN BY ROMAIN SILLON

HAY

TWIST FLOOR LAMP

HIGHLIGHTS

- Technically refined floor lamp with upward light and adjustable height
- The lamp height can be lengthened with a clever extending mechanism that creates a two-metre-tall light source
- Emits a soft, upward glow that enhances ambient lighting in a wide range of interior environments
- A discreet rotary knob allows for fine-tuning of the mechanism over time and with repeated use
- Designed for use with a replaceable standard retro fit LED dimmable bulb
- Suitable for both private and office environments

TWIST FLOOR LAMP
DESIGN BY ROMAIN SILLON

Designed for HAY by Romain Sillon, Twist is a height-adjustable lamp with a bold, innovative design. Its intuitive adjustment mechanism offers flexibility in both the position and lighting distribution, enabling it to serve different functions and create diverse atmospheres within a space, depending on its height. Twist's minimalist aesthetics and versatile design make it adaptable to a wide variety of spaces and uses within different interiors.

French designer Romain Sillon combines his background in product design with a meticulous and methodical approach. From his own design practice in Paris, he explores mechanics and movement to create a subtle, unexpected poetry in his work.

Romain Sillon

Twist Floor Lamp | Cream white

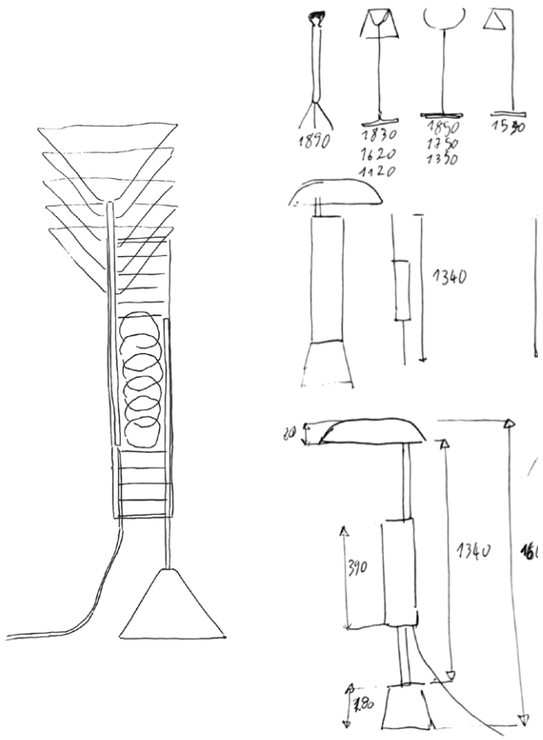

A technically refined floor lamp with soft upward light and adjustable height. Its smart extending mechanism allows the lamp to reach up to two metres.

Twist Floor Lamp | Cream white

Twist Floor Lamp | Cream white

Twist Floor Lamp | Cream white

Twist Floor Lamp | Cream white

Twist Floor Lamp | Cream white

Twist Floor Lamp | Cream white

MATERIALS

SHADE
Spun aluminium with powder coated finish

STEM
Clear anodised finish

BODY
Extruded aluminium with powder coated finish

BASE
Spun steel with powder coated finish with sand cast iron weight inside

CORD
Braided textile cable in black with silicone insulation

PRODUCT INFORMATION

DESIGN YEAR
2025

COUNTRY OF ORIGIN
China

COLOUR & FINISH

Please note that the colours are indicative

Cream white

DIMENSIONS

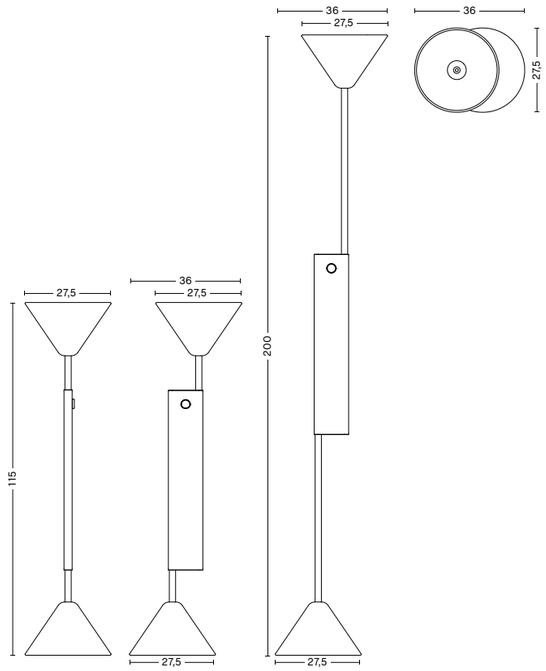

TWIST FLOOR LAMP
Width 36 cm
Depth 27,5 cm
Height 115-200 cm
Weight 9,7 kg

TECHNICAL SPECIFICATION

RECOMMENDED LIGHT SOURCE
LED E27 (A19), 10-15W (max. 15W), 1000-1500lm, 2700-3000K warm white
Bulb not included

DIMMABLE
Yes, if used in conjunction with a dimmable bulb

POWER SUPPLY
220-240V AC at 50/60Hz

IP
20

CORD LENGTH
240 cm

SWITCH
Floor dimmer switch

TEST SPECIFICATION OUTPUTS

Photometrics and the test specification shown is taken using the recommended LED bulb fitted in the production luminaire

LUMEN (LM)
1000-1500lm

KELVIN (CCT)
2700-3000K warm white

CRI (1-100)
80

PHOTOMETRICS

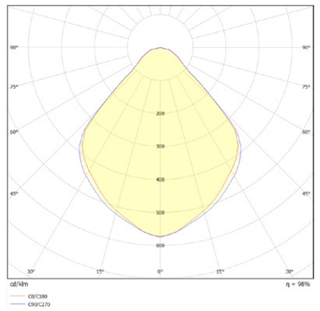

CERTIFICATES

CE APPROVED
This product has been assessed and complies with the essential requirements of the relevant European directives.

LED IP20

Tested according to the following European EN IEC standards which relate specifically to electrical lighting products including:

· EN 55015 (radio disturbance)
· EN 61547 (EMC immunity)
· EN 61000-3-2 (EMC compatibility)
· EN 61000-3-3 (EMC compatibility)
· EN 60598-2-4 (portable luminaires)
· EN 60598-1 (general requirements)
· EN 62493 (human exposure to EMC)

DOWNLOADS

Packshots and lifestyle photos, 2D / 3D files, care and maintenance, instructions, test certificates, product fact sheets, and product presentations are available in our Digital Library at hay.com.
LINK TO DIGITAL LIBRARY